Alexandria University
Faculty of Engineering
Production Engineering Department
May, 2018

جامعة الإسكندرية
كلية الهندسة
قسم هندسة الإنتاج
مايو ٢٠١٨

Elective 5 (CNC Machine Tools)
4th Year
Time allowed: 3 hrs.

إختياري ٥ (ماكينات التشغيل ذات التحكم الرقمي)
السنة الرابعة
الزمن المسموح: ثلاث ساعات

Answer the following 6 questions: Marks: 5, 10, 25, 15, 10 & 5.

N.B.: Neat Sketches are necessary

Q1- a- Explain the Spindle Speed- output performance curve for a CNC Machine Illustrating the Low speeds and the High speeds ranges.
b- What are the Rating systems in CNC Machines?, Explain the effect of Rating systems on the Spindle speed- output performance curve.

Q2- For the given Tooling Layout (**Fig. 1**); tabulate the tool file, tool offset file and the G50 statement for the given tools, identifying the tool nose vectors for the tools command points. (considering T6 with zero offset)

Q3 - For the given shape (**Fig. 2**), you are requested to;

1- Tabulate the important points for **tools paths** (dimensions are in mms for 0.01 mm accuracy) in absolute dimensioning system.
2- Identify the tools diameters and draw the tools paths
3- Write the necessary CNC part programming in the **word address format** for; profile milling, drilling cycles for the 9 holes and hole milling cycle for (30 mm diameter) in the given product for a depth of 5 mm.

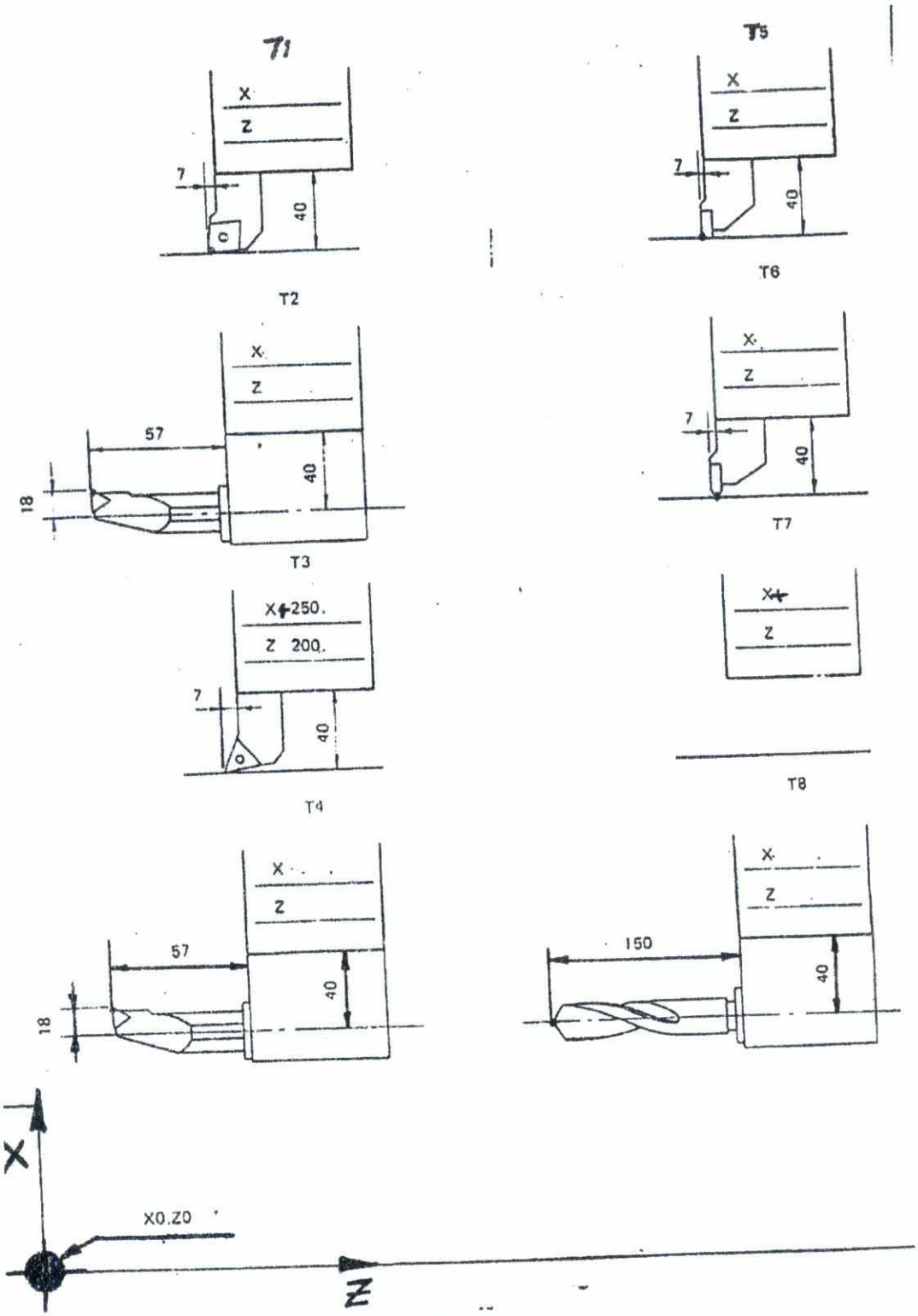
T1
X
Z
7
40
T2
T5
X
Z
7
40
T6
X
Z
57
18
40
T3
X
Z
7
40
T7
X 250.
Z 200.
7
40
T4
X
Z
T8
X
Z
57
18
40
X
Z
150
40
X
X0.Z0
Z

(Fig. 1)

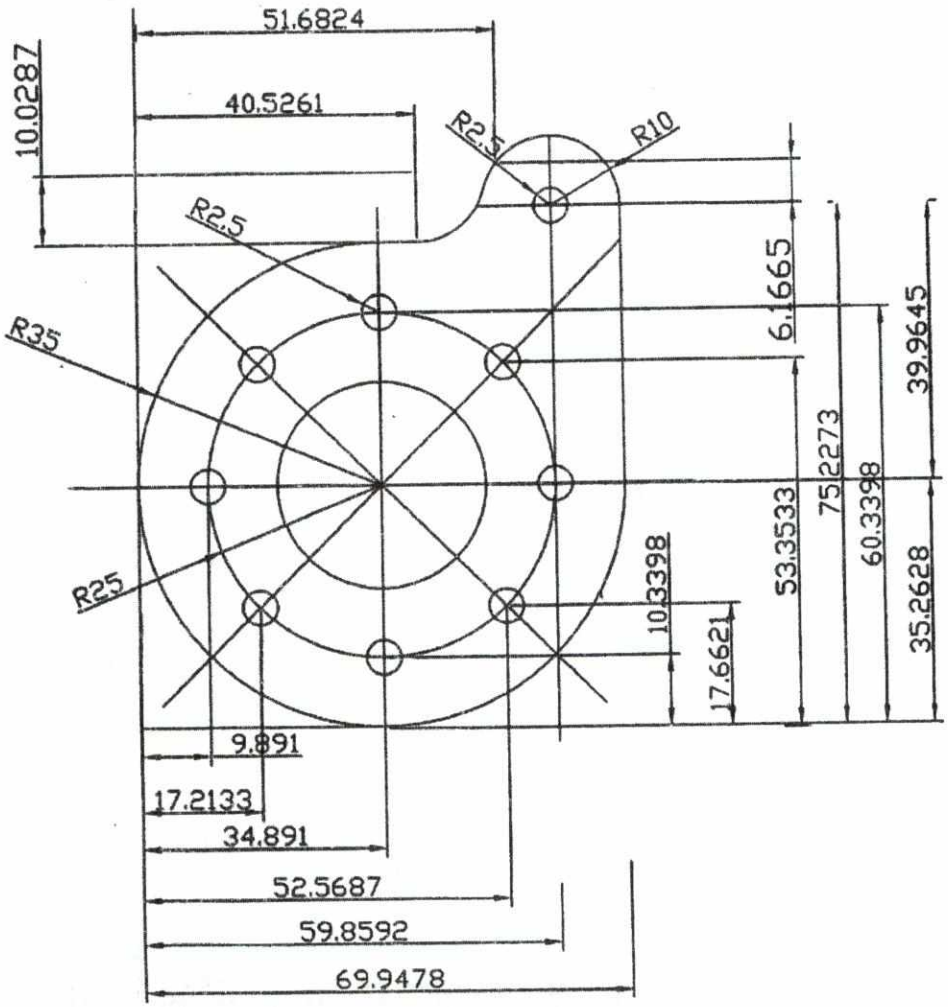

Dimensions in mms for 0.01 mm accuracy
Workpiece thickness is 10 mm and all holes are through holes…
The depth of the 30 mm diameter pocket is 5 mm.

(Fig. 2)

Q4 – With the aid of **neat sketches**, illustrate the following:

a . The use of driven tools in CNC turning.
b . Imaginary tool tip of a CNC turning cutting tool.
c . Constant Surface Speed (CSS) function in CNC turning.
d . The difference between G90 and G94 (and write down the necessary statement for the code)

Q5 – In the part drawing below, tolerances on diameters can be found. All chamfer tolerances are ±0.010. Material stock is a Φ1.5 inch aluminum bar.

Three cutting tools are used:

- T01: For the face and rough contour
- T03: For the finishing of the contour to size
- T05: 0.125 wide part-off tool

Write the part program to manufacture the shown part on a CNC turning center. Incorporate the tolerances defined on the part drawing in your part program **using wear offsets**. Use cutting speed = 100 ft/min, (1 ft = 12 inch). Make reasonable assumptions for any missing data.

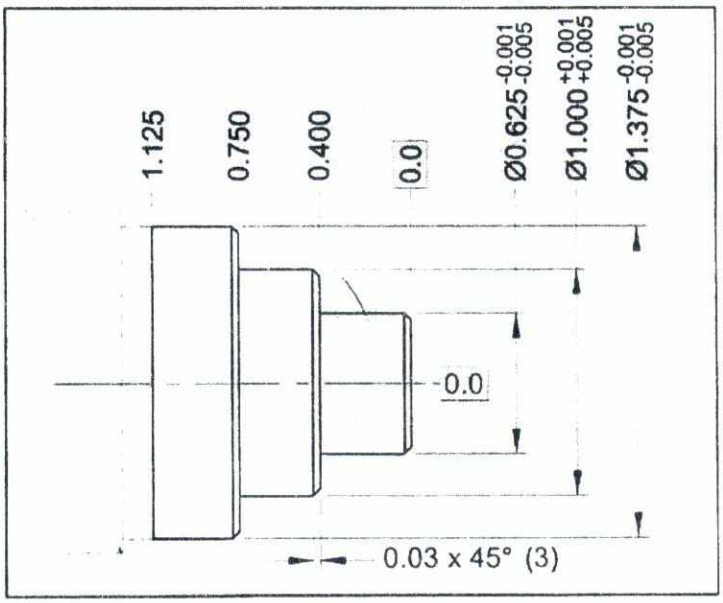

Q6 – For the part shown in the figure below, complete the part program provided to include the finishing procedure for the part's outer surface. The finishing tool is located at slot number 5 in the lathe turret.

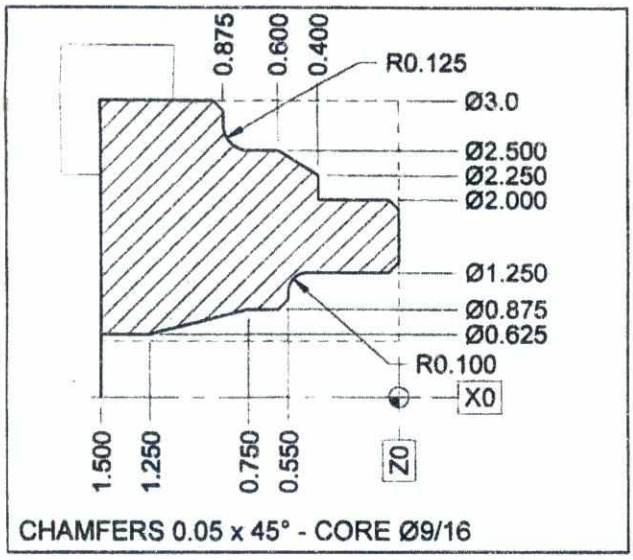


```
N1 G20
N2 T0100 M41            (OD ROUGHING TOOL + GEAR)
N3 G96 S450 M03         (SPEED FOR ROUGH TURNING)
N4 G00 G41 X3.2 Z0 T0101 M08   (START FOR FACE)
N5 G01 X0.36                   (END OF FACE DIA)
N6 G00 Z0.1                    (CLEAR OFF FACE)
N7 G42 X3.1             (START POSITION FOR CYCLE)
N8 G71 P9 Q17 U0.06 W0.004 D1250 F0.014
N9 G00 X1.7          (P POINT = START OF CONTOUR)
N10 G01 X2.0 Z-0.05 F0.005
N11 Z-0.4 F0.01
N12 X2.25
N13 X2.5 Z-0.6
N14 Z-0.875 R0.125
N15 X2.9
N16 G01 X3.05 Z-0.95
N17 U0.2 F0.02          (Q POINT = END OF CONTOUR)
N18 G00 G40 X5.0 Z6.0 T0100
N19 M01
N20
N21
N22
N23
N24
N25
```

Good Luck.

Faculty of Engineering, Production Engineering Dept. Fourth year	ALEXANDRIA UNIVERSITY	Elective 5: Failure Analysis Final Exam., 4-6-2018 Time Allowed 3 Hrs.

Total Marks = 5 questions x 14 = 70

1. During a typical failure analysis investigation procedure, discuss briefly the following:
a. The main background data required before investigation.
b. The priorities of using different mechanical testing techniques.
c. When and how to use macroscopic and microscopic examination.
d. Differentiating the conditions and measuring techniques of ductile and brittle types of fracture.
e. The possible techniques for measuring the toughness of a metallic part.

2. A large plate of soda-lime glass with limited thickness containing a 0.12 mm long elliptical crack and subjected to tensile loading. If the surface free energy γ_s for the material is 0.3 j/m^2 and E = 69 GPa:
a. Determine the stress required to propagate the crack.
b. What is the critical energy release rate, and the stress intensity factor.
c. If the thickness of the plate is large, would the stress required to propagate the crack be increased or decreased. Calculate the percentage if Poisson's ratio for the material is 0.25.
d. Would this percentage be higher or lower if the Poisson's ratio is 0.35.
e. Calculate the stress concentration factor if the crack height is 0.04 mm.

3. The blades in a steam turbine are 200 mm long and 60 mm^2 cross section, and are made of Titanium (E = 105 GPa). They are under tensile centrifugal force of 0.6 kN during operation. If the initial clearance between the blade tip and housing is 0.075 mm, and it is required that the final clearance is not less than 0.025 mm, calculate:
a. The maximum creep strain that can be allowed in the blades.
b. The total working hours before replacement of the blades if the minimum creep strain-rate of the blade material is 0.8 X 10^{-6} /hr.
c. If two parts in this turbine are bolted such that creep is prevented in that assembly, what would happen to the tightening stress on the bolt, and how to calculate that mathematically?
d. State the conditions to insure creep resistant materials in turbine blades? give 2 other typical examples of such materials.
e. How to calculate the activation energy for creep due to temperature rise.

4. It has been determined that the reciprocating sliding wear between two steel parts (yield strength = 840 MPa) is primarily abrasive in nature and may be regarded as three-body wear due to the debris produced. Further, analysis of the wear debris indicates an average particle size of about 100 μm (wear const. = 5×10^{-3}). The contacting interface between the parts is 25 mm wide by 50 mm long (in the direction of the motion) and the normal force between the parts is 120 N. The peak-to-peak magnitude of the reciprocating motion is 100 mm. If the device operates at a speed of 300 cycles per minute, you are asked to:

a. Estimate the time required to cause the shoe to wear away 2.5 mm.
b. What are the subcategories of this type of wear, and which one does this specific case represent?
c. How would this type of wear be controlled.
d. What is the effect of corrosive atmosphere on this wearing part, and is there an exception to this effect?
e. What are the effects of corrosion on wear?

5. Using neat sketches with minimum comments, represent the following:

a. The regions of crack growth rate, and the limit of the part life of a cracked part is under fatigue loading.
b. The effect of the mean fatigue stress on the stress amplitude?
c. The creep modes of failure in turbine blades and in boiler tubes.
d. The different mechanisms of impact wear.
e. The influence of stress and temperature on the creep behavior of metallic materials.

With best wishes,
Prof. M. Hamed

3 1

Alexandria University
Faculty of Engineering
Production Engineering Department
June 2018

جامعة الإسكندرية
كلية الهندسة
قسم هندسة الإنتاج
يونيه ٢٠١٨

Machine Tool Dynamics | **PE467** | اسم المقرر : ديناميكا ماكينات القطع
4th Year Prod. | السنة الدراسية : الرابعة إنتاج
Time allowed: Three hrs | الزمن : ثلاث ساعات

Question 1: 12 Marks

a) Identify the meaning and objectives of structural dynamics
b) Identify the difference between the following structural dynamics techniques:
   - Operational modal analysis (OMA)
   - Operating deflection shape (ODS)
c) FEA is one of the structural dynamics techniques. Identify both the meaning and objectives of this technique and describe why it needs comparison with real-world data.
d) Explain in details, how to obtain the modal parameters for a 5DOF object used in the lab. Experiment using roving hammer technique.

Question 2: 12 Marks

An impact test is carried out on a machine structure to determine its dynamic characteristics. The test is applied to a frequency range of 1500 Hz. Figure (1) shows both the real and imaginary parts of the FRF that could be obtained from the test.

a) How many modes does the structure have? What is the natural frequency of each mode?
b) Calculate the modal damping c_q, stiffness k_q and mass m_q , of each mode of vibration.
c) Write the equations of motion of the uncoupled modes of vibration you had determined.
d) Draw a graph representing the FRF curves of the uncoupled modes of vibration you had determined.

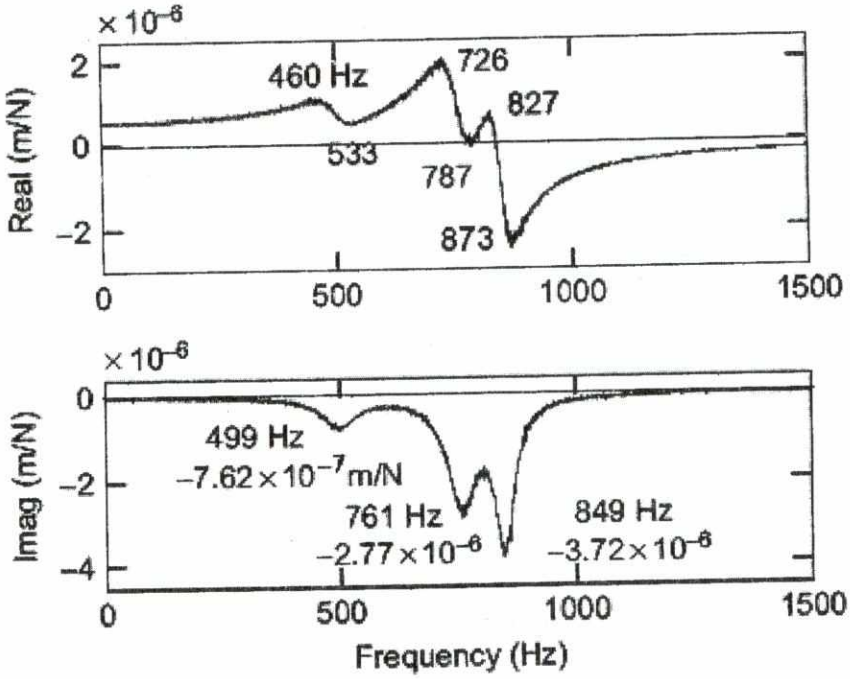

Fig (1)

Question 3: 8 marks

For a single-plane balancing of the rotor shown in Fig (2), the setup shown was used. The initial values of measured amplitude and phase angle were (V_o = 15 mm/s, θ_o = +55°) and after attaching **5** gram-trail mass, the measured vaules were (V_1 = 18 mm/s, θ_1 = +170°). You are asked to determine using a neat victor diagram, drawn to a suitable scale, both the value and location of the correction mass required to balance the rotor. (Assume that the rotor was rotating CW and the reference datum lies at the –ve side of X-axis).

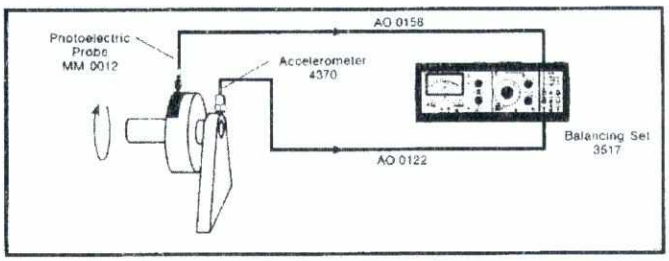

Fig (2)

Question 4: 12 marks

Answer the following:

a) Explain why Stable cutting conditions of a machine tool are always better at higher cutting speeds than at lower speeds.

b) What is meant by regenerative chatter in metal machining processes? Explain how this phenomenon is generated.

c) Explain why it is recommended in high speed machining to perform operations at cutting speed equal to the system resonance or its sub-harmonics.

d) Explain graphically the relation between the real part of the FRF of a machine tool structure and its stability chart (**draw only one lobe at N=1**) illustrating on both graphs:

- The corresponding equal frequencies.
- The variation of value of the chip phase shift ε.

Question 5: 14 marks

A new Lathe machine was imported with the stability chart shown in Fig (3). The end user desired to check the cutting characteristics of the machine. So, instead of carrying the standard cutting tests recommended by the manufacturer, he preferred to carry out an Acceptance dynamic test to validate the data given in the stability chart. Print out of Operative Receptance Locus of the machine is shown in Fig (4).

You are asked **to check** the following parameters:

1. The damping ratio ζ
2. The stiffness in terms of (N/m) of the machine structure.
3. The damped natural frequency of the machine structure.
4. The limit depth of cut $b_{cr,limit}$
5. The critical depth of cut b_{cr} at 3000 rpm
6. The critical depth of cut b_{cr} at 500 rpm
7. Tabulate your results and state if the machine is accepted from the dynamic point of view.

[Note that: the cutting stiffness term (Ks) of steel = 2000 MPa, and μ factor =1]

3172