Alexandria University
Faculty of Engineering
Electrical Engineering Department
June 2017

جامعة الإسكندرية
كلية الهندسة
قسم الهندسة الكهربية
يونيه ٢٠١٧

Introduction to Digital Logic Design and Programming
First year Electrical Engineering
Time allowed: 3 hours (for both part)

مدخل الدوائر المنطقية و البرمجة
السنة الدراسية : السنة الاولى
مدة الإمتحان : ٣ ساعات (للجزئين)

Choose the MOST APPROPRIATE answer for the following statements.

You may choose E (=ALL) if all answers (A, B, C and D) are correct or choose F (=NONE) if none of the answers fits.

Please write your answers on the ANSWER SHEET ONLY

In the designated answer sheet, mark your choice (ⓐ, ⓑ, ⓒ, ⓓ, ⓔ, or ⓕ) in front of the question number.

Be sure that you have filled the appropriate bubbles carefully as in the example below.

Example: if the choice for question 300 is C then your answer sheet should look like this

300. ⓐ ⓑ ● ⓔ ⓕ

Attempt ALL the following questions

PART I: (45 points for 60 questions)

Answer the questions from 1 to 39

1. Choose the correct statement.
   a. An identifier may start with a number.
   b. An identifier may end with a number.
   c. IF is a valid identifier.
   d. Either b or c.
2. Choose the correct statement.
   a. The elements of the array need not to be of the same data type.
   b. Size of the array must be known at compile time.
   c. Regarding the reading of a string, both scanf and gets can be used interchangeably.
   d. Either b or c.
3. Which among the following is neither a logical nor a relational operator?
   a. = b. != c. ! d. ||
4. ..... is a correct identifier within C program.
   a. _size_ b. _size c. size1 d. either b or c.
5. ..... is a correct C statement.
   a. char A = "A"; b. char* pA = 'A'; c. char pA; d. either b or c.
6. Define a pointer that points to an object of type unsigned int.
   a. unsigned int z, zPtr; zPtr = z;
   b. unsigned int z, *zPtr; zPtr = z;
   c. unsigned int z, zPtr; *zPtr = z;
   d. unsigned int z, *zPtr; zPtr = &z;
7. ..... displays the following hr: min: sec on the screen.
   a. printf("hr: ", "min: ", "sec: ");
   b. printf("hr: "); printf("min: "); printf("sec: ");
   c. printf("hr: %s", "min: ", "sec: ");
   d. either a or b.
8. ..... prompts the user to enter two integers values.
   a. scanf("%d%d", a, b);
   b. scanf("%d%d",& a, b);

c. scanf("%d%d, &a, &b); d. scanf("%i%i", &a, &b);

9. ..... prompts the user to enter a double value.
   a. scanf("%f", a); b. scanf("%f", &a);
   c. scanf("%lf", a); d. scanf("%lf", &a);
10. Evaluate the following statement float x=a/b+c%d; where a, b, c, d are integers. Assume a=d=5, b=c=4. Then, x=.....
    a. 1.250000 b. 5.250000 c. 0.000000 d. 5.000000
11. To declare a string that reserves maximally 10 symbols, the correct statement is .....
    a. char str [9]; b. char str[ ]; c. string str[10]; d. either b or c.
12. To declare an array that reserves maximally 10 characters, the correct statement is .....
    a. char str [9]; b. char* str = "0123456789"; c. char* str = "012345678"; d. either a or c
13. NAME is an array that can reserve maximally 20 characters. The string "Aly Amer" is copied to NAME. To display the 3rd element, y, then ..... is a correct statement.
    a. scanf("%s", name+3); b. scanf("%c",*(name+3));
    c. scanf("%c", &(name+2)); d. scanf("%c",*(name+2));
14. Given that y is of integer type, the following C- statements:
    Z1 = 3*(y-8)/9 ; Z2 = (y-8)/9*3; yield the same value .....
    a. For all values of y. b. If and only if y is an integral multiple of 9.
    c. If and only if y = 0. d. If and only if y = 8.
15. The following C-statement is used to display information on the screen.
    a. printf("The sum is %d\n, "x+y); b. printf(%d is equal to %d\n", x, y);
    c. printf("The value you entered is: %d\n, &value); d. scanf("%d", &value);
16. Choose the correct statement that initializes the value of the variable A to the character 7.
    a. char A = 7; b. char A = "7"; c. char* A = '7'; d. either b or c.
17. Choose the correct C statement that performs the subtraction of two numbers stored in the variables a and b respectively, and stores the result in a variable called difference.
    a. a – b = difference; b. b – a = difference; c. either a or b d. –a + b = difference;
18. Given that a, b, c, z are integers, assume a = 3, b = 9 and c = 18. After performing the statement z = a + b % c – a - -; Then z = ...
    a. 0 b. 1 c. 9 d. 10
19. Assume a = 3, b = 6, c = 8, and d = 9. After the following statements are evaluated, z1 and z2 equal ..... respectively. z1 = b = = 1 || c <= 9; z2 =!(a + c) || !(a != b);
    a. 0, 0. b. 1, 1. c. 0, 1. d. 1, 0.
20. Assume a = 3, b = 6, c = 8, and d = 9. After the following statements are evaluated, z1 and z2 equal ..... respectively. z1 = !(a + b > d); z2 = (a != 1 && d >= 9);
    a. 0, 0. b. 1, 1. c. 0, 1. d. 1, 0.
21. The following C statements increase the value of n by 2.
    a. n++; ++n; b. n += 2; c. n = n + 2 d. either b or c.
22. After the statement p = (((4 + 3) – 5) * 7) % 3; is performed, the value of p is .....
    a. 0 b. 2 c. 3 d. 4
23. Given that a, b, c, d are integers, assume a = 10, b = c = 5. After the statement d = b + c = = ++ a; is performed, ...
    a. d = 0, a = 10 b. d = 0, a = 11 c. d = 1, a = 10 d. d = 1, a = 11
24. y points to x. Then, the statement ..... is equivalent to the statement ++x;
    a. ++y; b. &x + = 1 ; c. *y += 1; d. either b or c
25. To reserve 100 locations for a float array p, write .....
    a. p[100] b. p[101] c. p[] d. either b or c
26. To reserve 4 locations for integer array A such that each element is initialized to 2, write .....
    a. int A[5] = {2}; b. int A[4] = {2}; c. int A[ ] = {2, 2, 2, 2}; d. either b or c

27. Assume two arrays of type integers. Array p of 50 elements, and array q of 100 elements. To copy the fifth element of p into the last element of q, write .....

a. q[100] = p[4]; b. q[99] = p[4]; c. *(q + 99) = *(p + 4); d. either b or c

28. Assume two arrays of type integers. Array p of 50 elements, and array q of 100 elements. To copy the fifth element of p into the last element of q, write .....

a. q[100] = p[5]; b. q[99] = p[5]; c. *(q + 100) = *(p + 5); d. either a or c

29. The following program fragment .....

```
int x = 20, p = 2;
if ( p != 0);
   x = x / p;
```

a. results in a compiler error. b. after being performed, the value of x remains 20.

c. results in an execution error. d. after being performed, and the value of x becomes 10.

30. The following program fragment .....

```
int d = 11; int sum = 0;
while( d!= 10){
   sum += d; d++}
```

a. results in a compiler error. b. after being performed, it results in an infinite loop.

c. results in an execution error. d after being performed, the loop is executed once.

31. After the following program fragment is performed, the value of the variable result is ..... All variables are integers. Assume i = result = 1, and x = 2.

```
while( i <= 5){ result * = x; ++ i;}
```

a. 2 b. 12 c. 24 d. 32

32. The following program fragment validates user input. The user input is stored using the variable N, N is integer. On any input, the program is kept looping until the user enters a value for N such that 0<N≤50.

a.
```
do{
    scanf("%d", &N);}while(N<=0 || N> 50);
```

b.
```
do{
   scanf("%d", &N);}while(N>0 && N<=50);
```

c.
```
for( ; ; ){
   scanf("%d", &N);
   if( N<= 0 || N>50)      continue;}
```

d. either b or c.

33. The following program fragment ..... Assume x = 12, and y = 9.

```
if( x<10)
if( y>10)
printf("****");
else
 printf("####");
printf("&&&&");
```

a. results in a compiler error. b. results in an execution error.

c. runs, and ####&&&& is displayed. d. runs, and &&&& is displayed.

34. After the following program fragment is performed, it displays .....

```
for(row = 3; row >= 1; - - row)
for(column = 1; column <= 3; ++column)
printf("%c", row%2? '<':'>');
printf("\n");
```

a. <<<
   >>>

b. >>>
   <<<

<<< >>>

c. <<<>>><<< d. >>><<<>>>

35. After the following program fragment is performed, ...

```
int a = 5, b = 7;
a += b; b*= -1; b += a; a += -b;
```

a. a = 14, b = 7. b. a = 7, b = 5. c. a = 5, b = -2. d. a = -2, b = 12

36. For the following program fragment, the loop will be executed .....

```
counter = 0; x = 0;
do{x += counter + 3; } while(counter != 0);
```

a. zero time. b. once. c. twice. d. infinitely.

37. After the following program fragment is performed, it displays .....

```
n = 1;
while(n < 5){Y = n++; printf("%d", Y);}
```

a. the values from 1 to 5. b. the values from 2 to 5.
c. the values from 1 to 4. d. the values from 2 to 4.

38. After the following program fragment is performed, it displays .....

```
n = 1;
while(n < 5){Y = n++; printf("%d", n);}
```

a. the values from 1 to 5. b. the values from 2 to 5.
c. the values from 1 to 4. d. the values from 2 to 4.

39. The following program segment has an error.

a.
```
int sum( int x, int y ){
    int result;
    result = x + y;}
```

b.
```
void Increment( float a){
    float a;
    a = a +1;}
```

c.
```
void Max( int a, int b){
    int max;
    max = a>b? a: b;
    return max;}
```

d.
```
int func1(void){
    printf("Inside func1\n");
    int func2(void){
        printf("Inside func2\n");}}
```

Consider the following program. Then, answer the questions from 40 to 45

```
#include..... (1) .....
int main( ){
..... (2) .....
..... (3) .....
..... (4) .....
z = strlen(str1) + strlen(str2);
return 0;}
```

40. On (1), write .....

a. <stdio.h> b. <stdio.h>; c. <string.h>; d. <string.h>

41. On (2), define two strings, str1, and str2. str1 includes the word Computer, whereas str2 includes the word Science.

a. string str1[] = "Computer", str2[] = "Science";
b. char str1[] = "Computer", str2[] = "Science";
c. string str1[] = "Computer"; str2[] = "Science";

d. char *str1 = "Computer"; *str2 = "Science";

42. On (3), declare an array that should store 100 characters.
    a. string temp[100]; b. char *temp[100]; c. char *temp; d. char temp[100];
43. On (4), declare a variable, z, and store the value 0 in it.
    a. int z, z = 0; b. int z = '0'; c. char z = '0'; d. int z = = 0;
44. After the program is performed, z = ...
    a. 17 b. 8 c. 9 d. 15
45. To swap the contents in str1 and str2, such that str1 includes the word Science and str2 includes the word Computer, write .....

a.	temp = str1; str1 = str2; str2 = temp;	b.	strcpy(str1, temp); strcpy(str2, str1); strcpy(temp, str2);
c.	either a or b.	d.	temp = str2; str2 = str1; str1 = temp;

Consider the following program fragment. The variables n and x are integers, and the value of n is given by the user. For n = 1, the value of x is incremented. For n = 2, the value of x is decremented. For n = 3, square of x is calculated. Answer the questions from 46 to 49.

```
switch(n){
case 1:
 ++ x;
case 2:
 --x; break;
case 3:
 x *= x; break;}
```

46. The program fragment .....
    a. results in a compiler error. b. is compiled successfully.
    c. results in an execution error. d. either a or c.
47. Assume x = 10, and n = 1. After the program fragment is performed, x = ...
    a. 9 b. 10 c. 11 d. 100
48. Assume x = 10, and n = 2. After the program fragment is performed, x = ...
    a. 9 b. 10 c. 11 d. 100
49. Assume x = 10, and n = 3. After the program fragment is performed, x = ...
    a. 9 b. 10 c. 11 d. 100

The following program fragment should display the values from 1 to 10 that are divisible by 3. Answer the questions from 50 to 55

```
int n = 1;
while(..... (1) .....){
      printf(.....(2)..... n);    // display the required values that are stored using the variable n.
      ..... (3) .....}
```

50. On (1), write .....
    a. n >= 1 b. n%3 = = 0 c. n <= 10 d. n < 10
51. On (1), write .....
    a. n >= 1 && n%3 = = 0 b. n <= 10 && n%3 = = 0
    c. n >= 1 && n/3 != 0 d. n >= 1 && n/3 != 0
52. On (1), write .....
    a. n >= 1 || n%3 = = 0 b. n <= 10 || n%3 = = 0

c. n >= 1 || n/3 != 0 d. n >= 1 || n/3 != 0

53. On (2), write .....
    a. "%d ", b. "%d\n,& c. %d\n, " d. "%d\n, "
54. On (3), write .....
    a. ++n; b. n++; c. either a or b d. n += 1;
55. On (3), write .....
    a. --n; b. n--; c. either a or b d. n += 1;

Consider the following program. Then answer the questions from 56 to 60.
The program calculates the square of the positive numbers that are less than 10. The variable a is the positive number, and its square is stored in the array z. The file math.h is not included.

```
..... (1) .....
int main( ){
    int a, i = 0, z[20];
   for(..... (2) .....)
        ..... (3) .....        // function call and store values in the array z
   return 0;}
int square(int b){
..... (4) .....;
}
```

56. On (1), write .....
    a. int square(int) b. . int square(int); c. . int square(b) d. #include<stdio.h>
57. On (2), write .....
    a. a = 10; a > 0; --a b. a = 1 ; a <= 9; ++a
    c. either a or b. d. a > 0 ; a < 10; ++a
58. On (4), write .....
    a. return 0; b. return pow(b,2); c. return b^2; d. either b or c.
59. On (4), write .....
    a. return 0; b. return sqrt(b); c. return b * b; d. either b or c.
60. On (3), write .....
    a. z[i++] = square(a); b. z[i] = square(a);
    c. z[i++] = square(b); d. z[i] = square(b);

PART II: Digital Logic Design (45 points for 140 questions)

61. To control a DC Motor in one direction, you need .....
    a. Only one switch b. Four switches c. H bridge d. (b) and (c)
62. The L293D Integrated Circuit is .....
    a. Transistor array IC b. H bridges IC c. Up down counter IC d. BCD to 7 segment decoder IC
63. The ULN2003 Integrated Circuit is .....
    a. Transistor array IC b. H bridges IC c. Up down counter IC d. BCD to 7 segment decoder IC
64. The L298 IC can be used for controlling .....
    a. only one DC motor in one direction c. two DC motors in one direction
    b. only one DC motor in both directions d. two DC motors in both directions

65. The ULN2003 IC can be used for controlling .....
    a. only one DC motor in one direction
    b. only one DC motor in both directions
    c. two DC motor in one direction
    d. two DC motor in both directions
66. The L293D IC has ..... internal freewheeling diodes
    a. No b. Two c. Four d. Eight
67. A capacitor with (102) code has a value of .....
    a. 1pF b. 10pF c. 1nF d. 10nF
68. The TTL series is generally known as .....
    a. 47xx series b. 40xx series c. 74xx series d. 45xx series
69. The 7408 IC has ..... internal gates.
    a. Two b. Four c. Six d. Eight
70. The 7404 IC has .....internal gates.
    a. Two b. Four c. Six d. Eight

You have studied the circuit in the figure shown below in the lab. The 74LS192 is a pre-settable divide-by-12 up/down counter with clear. The 74LS48 is a BCD to seven segment decoder driver. The upper circuit is for the Least Significant Digit (LSD), while the lower one is for the Most Significant Digit (MSD). The clock input is connected through a push-button to the input of each of the two circuits just like in your lab experiments. Solve from Q.71 to Q.80

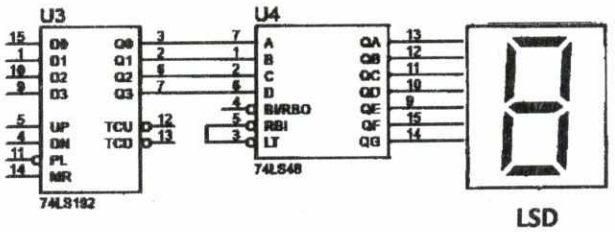

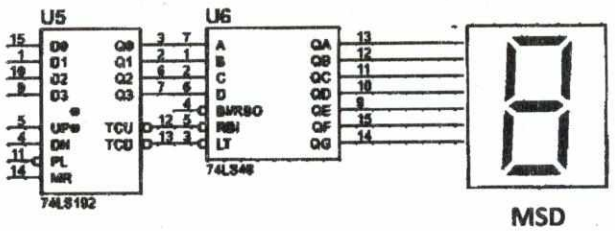

71. To count up in the first seven segment (LSD) .....
    a. "UP" signal needs to be connected to High and push button with pull-down resistor connected to "DN" pin
    b. pull up resistor with push button needs to be connected to "UP" pin and "DN" pin connected to High
    c. pull up resistor with push button needs to be connected to "UP" pin and "DN" pin connected to Low
    d. "UP" signal needs to be connected to Low and push button with pull down resistor connected to "DN"
72. MR pin is used to .....
    a. start counting from used defined number
    b. count from 0 c. reset the IC d. neglect zero in counting
73. To start counting from a specific number MR must be connected to ..... and PL connected to .....
    a. LOW - HIGH b. HIGH - LOW c. HIGH - HIGH d. LOW - LOW
74. RBI and RBO are used for .....
    a. controlling illumination
    b. disabling zero counting in LSB
    c. checking the 7 segment
    d. disabling zero counting in MSB
75. When LT pin is connected to High .....
    a. all LEDs in Seven segment are turned on
    b. all LEDs in the seven segment are turned on but in sequence
    c. Seven segment is blanked
    d. IC is turned on
76. TCU pin in 74192 is ..... all the time except when counter is .....
    a. HIGH - 9 b. LOW - 9 c. HIGH - 0 d. LOW - 0
77. TCD pin in 74192 is ..... all the time except when Counter is .....
    a. HIGH - 9 b. LOW - 9 c. HIGH - 0 d. LOW - 0
78. To disable zero in MSB 2 digits counter ..... decoder must be connected .....
    a. RBI and RBO of 1st – together c. RBO of 1st - to RBI of 2nd decoder

a. RBI and RBO of 2nd – together d. RBI of 1st - to RBO of 2nd decoder

79. To count up for 2 digits ..... counter connected to ..... counter
    a. TCO of second - TCO of first c. TCO of second - Up of first
    b. TCO of first - TCO of second d. UP of second - TCO of first
80. What does the small bubble on the input of PL mean?
    a. open collector input b. totem pole input c. inverted input d. tri-state
81. The advantage of using a free - wheeling diode in the H-bridge circuit is .....
    a. There is always a path for the DC current due to motor reaction.
    b. a protection to transistor
    c. Prevent current flowing from emitter to collector
    d. used to stop motor when switch is off
82. A 555 timer is connected for astable operation as shown in the figure aside along with the output waveform. It is determined that the duty cycle should be 0.5. What steps need to be taken to correct the duty cycle, while maintaining the same output frequency?
    a. increase the value of C c. decrease R_1 and R_2
    b. increase V_{cc} and decrease R_L d. decrease R_1 and increase R_2
83. The time period of a monostable 555 multivibrator of the previous question is given by .....
    a. T=0.33RC b. T=1.1RC c. T=3RC d. T=RC
84. For the 555 timer of the previous two questions, how is it possible to achieve nearly 50% duty cycle in adjustable rectangular waveform generator?
    a. R1 < R2 b. R1 > R2 c. R1 = R2 d. R1 ≥ R2
85. The ..... is defined as the time the output is active divided by the total period of the output signal.
    a. on time b. off time c. duty cycle d. active ratio

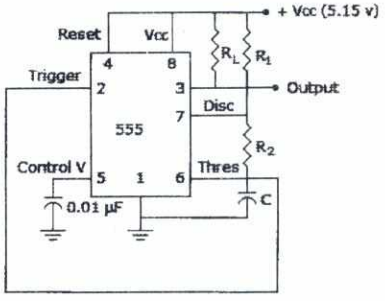

86. Determine the frequency (f) and duty cycle (δ) of a rectangular wave generator shown in the figure below to the left.
    a. f = 63.7kHz; δ = 50% b. f = 53.7kHz; δ = 55% c. f = 43.7kHz; δ = 50% d. f = 60kHz; δ = 55%

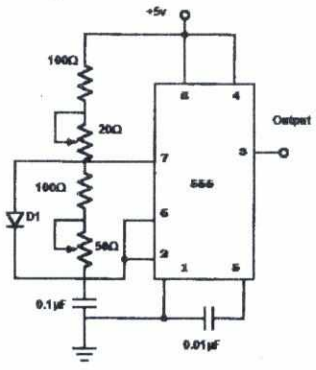

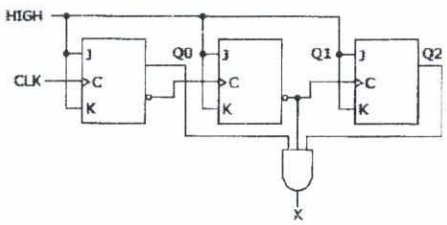

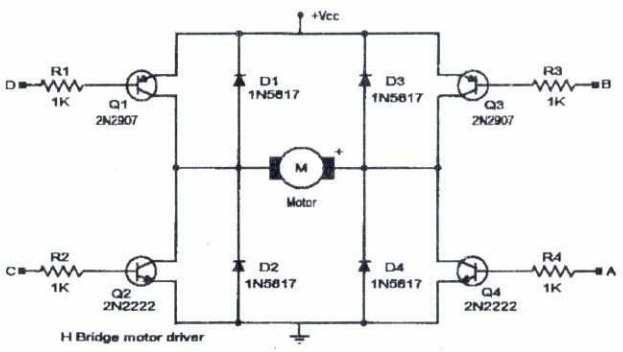

87. What decimal value is required to produce an output at "X" for the flip flop circuit shown in the centre figure above?
    a. 1 b. 1 or 4 c. 2 d. 5
88. For the H-bridge circuit shown in the figure above to the right, the motor (M) rotates clockwise if the voltage applied at its terminals if the leftmost terminal is positive. In order to rotate the motor (M) clockwise, ...
    a. Q1 and Q2 must be on and Q3, Q4 must be off c. Q1 and Q4 must be off and Q3, Q2 must be on
    b. Q1 and Q4 must be on and Q2, Q3 must be off d. Q1, Q2, Q3 andQ4 must be on
89. Once an up/down counter begins its count sequence, it cannot be reversed.

a. True b. False c. True under condition d. Not applicable

90. Four J-K flip-flops are cascaded with their J-K inputs tied HIGH. If the input frequency (f_{in}) to the first flip-flop is 32kHz, the output frequency from the last flip-flop (f_{out}) is .....
a. 1kHz b. 2kHz c. 4kHz d. 16kHz

91. The designation UP/$\overline{\text{DOWN}}$ means that the .....
a. up count is active-HIGH, the down count is active-LOW
b. up count is active-LOW, the down count is active-HIGH
c. up and down counts are both active-LOW
d. up and down counts are both active-HIGH

92. Binary coded decimal (BCD) numbers express each digit as a .....
a. Byte b. Nibble c. Bit d. Word

93. Which of the following is an unweighted code?
a. 8421 code b. excess-3 code c. 2421 code d. 5211 code

94. Let a_n, a_{n-1}, ... a_1, a_0 be the binary representation of an integer "A". Then A is divisible by 3 if .....
a. number of 1's is divisible by 3
b. number of 0's is divisible by 3
c. number of 1's of is divisible by 6
d. difference of alternate sum, i.e. a0 + a2 +.....- (a1 + a2 + ...) is divisible by 3

95. Which of the following binary numbers is equal to its 1's complement?
a. 1010 b. 1001 c. 0000 d. No such number exists

96. Which of the following binary numbers is the same as its 2's complement?
a. 1010 b. 0101 c. 1000 d. 1001

97. Which of the following statements is not true about BCD code?
a. Conversion to and from the decimal system can be done easily.
b. It is an 8-4-2-1 weighted code
c. (a) and (b)
d. Complement of a number can be found efficiently

98. How many 1's are present in the binary representation of $(15 \times 256 + 5 \times 16 + 3 \times 1)_{10}$ is .....
a. 8 b. 9 c. 7 d. 11

99. What is the 2's complement representation of -5/8?
a. 0.1010 b. 1.0111 c. -0.1101 d. 1.0110

100. The result of the subtraction $(FD)_{16} - (88)_{16}$ is .....
a. $(75)_{16}$ b. $(65)_{16}$ c. $(5E)_{16}$ d. $(10)_{16}$

101. The result of the addition $(A0)_{16} + (613)_{16}$ is .....
a. $(6B3)_{16}$ b. $(16\ B)_{16}$ c. $(A0B)_{16}$ d. $(A6B)_{16}$

102. The octal equivalent of decimal 324.987 is .....
a. 504.771 b. 540.781 c. 215.234 d. 345.346

103. In binary system decimal 0.875 may be represented by .....
a. 0.0011 b. 0.0101 c. 0.011 d. 0.111

104. The range for 13-bits complement numbers expressed in decimal, is from .....
a. -127 to + 128 b. -127 to + 127 c. -128 to + 128 d. -128 to +127

105. In 2's complement representation, a certain negative number -N is 1011. The representation of +N is .....
a. 0100 b. 0101 c. 0110 d. 1111

106. If x and y are two octal digits, given the equation: $(x567)_8+(12yx\ 5)_8=(71yx)_8$, then the values of x and y are .....
a. 4, 4 b. 3, 3 c. 4, 3 d. 3, 4

107. A 12 bit binary number has an accuracy equivalent to the decimal fraction .....
a. 1/1024 b. 1/2048 c. 1/4096 d. 1/8192

108. The sign magnitude representative of the decimal number -637 in decimal notation is .....
a. 0687 b. 9687 c. 1687 d. 1620

109. (r-1)'s complement of the (r-1)'s complement of an integer number is .....

a. original number b. (r-2)'s complement of the number c. r's compliment d. BCD code of number

110. A decimal number has 30 digits. Approximately, how many digits would the binary representation have?

a. 30 b. 50 c. 101 d. 120

111. Consider a number system with radix 20. The excess code that is necessary for its equivalent binary coded representation is .....

a. 7 b. 6 c. 3 d. 4

112. Which one of the following is the result of dividing (0011 1000)2by (1000)2?

a. $(1100)_2$ b. $(1110)_2$ c. $(0011)_2$ d. $(00111)_2$

113. A logic circuit which is used to change a BCD number into an equivalent decimal number is .....

a. Decoder b. Encoder c. Multiplexer d. Demultiplexer

114. If $(12A7C)_{16} = (X)_8$ then value of X is .....

a. 224174 b. 425174 c. 17325 d. 225174

115. What is the binary equivalent of Gray code 11100?

a. 11011 b. 10101 c. 00111 d. 10010

116. A computer with a 32-bit word size uses 2's complement to represent numbers. The range of integers that can be represented by this computer is

a. -2^{32} to 2^{32} b. -2^{32} to 2^{31} c. -2^{31} to $2^{31}-1$ d. -2^{32} to 2^{31-1}

117. 1: Even parity is being used for error checking computer data. If data word to be transmitted is 0101 0111, the value of the parity will be .....

a. 0 b. 1 c. 1 or 0 d. 00

118. In 2's complement addition, overflow .....

a. is flagged whenever there is carry from sign bit addition

b. cannot occur when a positive value is added to a negative value

c. is flagged when the carries from sign bit and previous bit match d. does not occur

119. In a digital counter circuit feedback loop is introduced to .....

a. Improve distortion c. Reduce the number of input pulses to reset the counter

b. Improve stability d. Asynchronous input and output pulses

120. With the use of an electronic counter six capsules are to be filled in bottles automatically. In such a counter what will be the number of flip-flops required?

a. 3 b. 12 c. 6 d. 8

121. A pulse train can be delayed by a finite number of clock periods using .....

a. a serial-in serial-out shift register c. (a) or (b)

b. a serial-in parallel-out shift register d. a parallel-in parallel-out shift register

122. How many illegitimate states has synchronous mod-6 counter which uses 3 bits?

a. 3 b. 2 c. 1 d. 6

123. A ring counter is same as .....

a. up-down counter b. parallel-counter c. shift register d. Ripple carry Counter

124. A 2-bits binary multiplier can be implemented using .....

a. 2 2-input-ANDs only c. 2 2-input-NORs and 1 2-input- XNOR gate

b. 2 2-input-XORs and 4 2-input-AND gates only d. NOR gates and shift registers

125. An n-stage ripple counter will count up to .....

a. 2^n b. 2^{n-1} c. n d. 2^n-1

126. The clock signals are used in sequential logic circuits to .....

a. tell the time of the day c. synchronize events in various parts of system

b. tell how much time has elapsed since the system was turned on d. carry parallel data signals

127. A sequential circuit outputs a "1" when an even positive number of ones are input; otherwise the output is "0". The minimum number of sequential states required is .....

a. 0 b. 1 c. 2 d. 3

128. A shift register can be used for .....

a. Digital delay line b. Serial to parallel conversion c. Parallel to serial conversion d. (a) and (b)

129. Popular application of flip-flop are .....

a. Transfer register b. Shift registers c. Counters d. (a) and (b)

130. For which of the following flip-flops, the output is clearly defined for all combinations of two inputs?

a. Clocked S-R flip-flop b. R-S flip-lop c. J-K flip-lop d. T flip-flop

131. To build a mod-19 counter the number of flip-flops required is .....

a. 3 b. 5 c. 7 d. 9

132. The astable multivibrator has ..... states.

a. Two quasi- stable b. Two stable c. One stable and one quasi-stable d. (a) or (b)

133. How many bits are required to encode all twenty six letters of the alphabet, ten symbols, and ten numerals?

a. 5 b. 6 c. 10 d. 48

134. The functional difference between S-R flip-flop and J-K flip-flop is that J-K flip-flop .....

a. is faster than S-R flip-flop b. Has two feed-back paths c. Accepts both inputs 1 d. (b) and (c)

135. In a negative level clocked master slave J-K flip-flop, a low J and low K produces .....

a. No change b. Low state c. High state d. Toggle

136. The master slave JK lip-flop is effectively a combination of ..... with output to input feedback.

a. an SR flip-flop and a T flip-flop c. a T flip-flop and a D flip-flop

b. an SR flip-flop and a D flip-flop d. two D flip-flops

137. It is difficult to design asynchronous sequential circuit because .....

a. External clock is to be provided c. (a) and (b)

b. It is more complex d. Generally they involve stability problem

138. In a ripple counter using edge triggered J-K flip-flops, the pulse input is applied to the .....

a. clock input of all flip-flops c. J and K inputs of all flip-flops

b. clock input of the last flip-flops d. J and K inputs of first flip-flop

139. The number of clock pulses needed to shift one byte of data from input to the output of a 4-bit serial shift register is .....

a. 10 b. 12 c. 16 d. 32

140. Which of the following unit will you choose in order to transform decimal number into binary codes?

a. Encoder b. Decoder c. Multiplexer d. Counter

141. If a clock with time period 'T' (sec) is used with an "n" stage shift register, then the output of the final stage will be delayed by ..... sec

a. nT b. (n-1)T c. n/T d. (2n+1)T

142. A register is a .....

a. set of capacitor used to register input instructions in a digital computer

b. set to paper tapes and cards put in a file c. part of the main memory

d. temporary storage unit within the CPU having dedicated or general purpose use

143. The number of flip-flops required in order to represent the seconds using a 1Hz clock input digital 24-hour watch is .....

a. 3 b. 4 c. 8 d. 10

144. The number of flip-flops required in order to represent the minutes using a 1Hz clock input digital 24-hour watch is .....

a. 3 b. 4 c. 8 d. 10

145. The number of flip-flops required in order to represent the hours using a 1Hz clock input digital 24-hour watch is .....

a. 3 b. 4 c. 8 d. 10

For the sequential circuit shown in the figure aside, if initially all flip-flops are cleared, answer from Q.146 to Q.148.

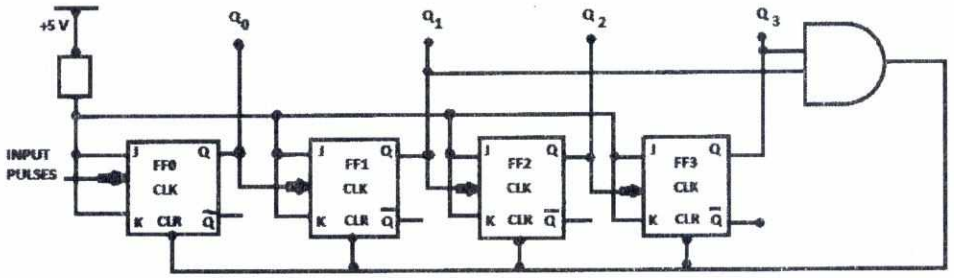

146. How many clock pulses have to be applied to the system before the output from FF3 becomes a HIGH level?

a. 2 c. 6

b. 4 d. 8

147. The largest number that can appear on the output of the circuit is .....

a. 5 b. 9 c. 10 d. 15

148. If all flip flops were initially preset, the next number appearing on the outputs of the circuit is .....

a. 5 b. 9 c. 10 d. 15

The arrangement of the edge triggered J-K flip-flops in the given figure below has an initial state of 000 and is to be addressed by Q.149 to Q.156.

149. The function performed by the circuit is .....

a. shift register b. mod-3 counter c. mod-6 counter d. mod-2 counter

150. The outputs of the circuit from left to right after the first clock edge is .....

a.011 b. 100 c. 001 d. 110

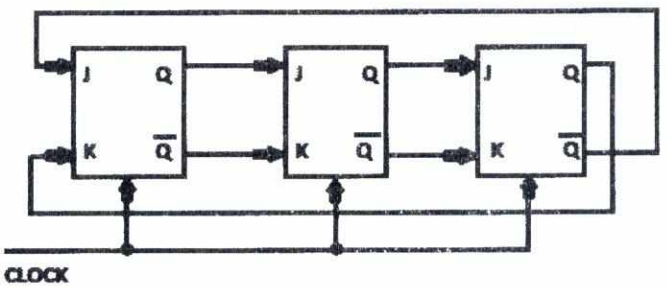

151. The outputs of the circuit from left to right after the second clock edge is .....

a.011 b. 100 c. 001 d. 110

152. The outputs of the circuit from left to right after the third clock edge is .....

a.011 b. 100 c. 001 d. 110

153. The outputs of the circuit from left to right after the fourth clock edge is .....

a.011 b. 100 c. 001 d. 110

154. The outputs of the circuit from left to right after the fifth clock edge is .....

a.011 b. 100 c. 001 d. 110

155. The outputs of the circuit from left to right after the sixth clock edge is .....

a.011 b. 100 c. 001 d. 110

156. The outputs of the circuit from left to right after the seventh clock edge is .....

a.011 b. 100 c. 001 d. 110

The arrangement of the edge triggered D-flip-flops in the given figure below has an initial state of initial state Q0=1, Q1=Q2=0 and the output state of the circuit is given by the equation 4Q2+2Q1+Q0. It is to be addressed by Q.157 to Q.163.

157. The initial output of the circuit before the first clock edge is .....

a.1 b. 2 c. 3 d. 5

158. The output of the circuit after the first clock edge is .....

a.1 b. 2 c. 3 d. 5

159. The output of the circuit after the second clock edge is .....

a.1 b. 2 c. 3 d. 5

160. The output of the circuit after the third clock edge is .....

a.1 b. 2 c. 3 d. 5

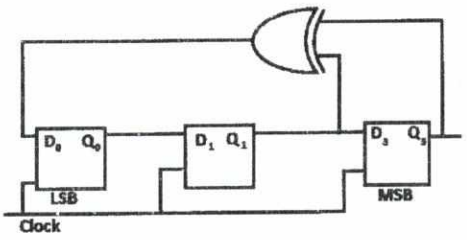

161. The output of the circuit after the fourth clock edge is .....

a.1 b. 2 c. 3 d. 5

162. The correct output state sequence of the circuit is .....

a. 1, 3, 4, 6, 7, 5, 2 c. 1, 2, 7, 3, 5, 6, 4

b. 1, 2, 5, 3, 7, 6, 4 d. 1, 6, 5, 7, 2, 3, 4

163. If the initial state was 000, the next output state of the circuit would be .....

a. 000 b. 001 c. 100 d. 011

Consider a function that is defined by the truth table given aside. Note that "X" represents don't care conditions. It is required to answer from Q.164 to Q.166.

A	B	C	F(A, B, C)
0	0	0	1
1	0	0	1
0	1	0	1
1	1	0	1
0	0	1	1
1	0	1	0
0	1	1	X
1	1	1	X

164. The minimum SOP expression is .....

a. $\bar{A} + \bar{C}$ b. $A + C$ c. $A + B + C$ d. $\bar{A} + \bar{B} + \bar{C}$

165. The minimum POS expression is .....

a. $\overline{AC}$ b. AC c. ABC d. $\overline{ABC}$

166. Which of the following statements about the minimal SOP and minimal POS implementations is incorrect? They are .....

a. logically equivalent because don't cares are used in the same way.

b. not logically equivalent because don't cares are used in the different ways.

c. not logically equivalent by definition.

d. logically equivalent by definition.

167. What is the Boolean expression for the circuit given aside?

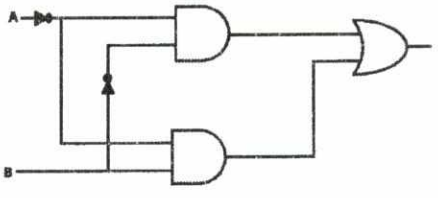

a. $Y = \overline{A}\,B + \overline{A}\,\overline{B}$ c. $Y = \overline{A} + \overline{B}$

b. $Y = A \oplus B$ d. $Y = \overline{A}\ \overline{B}$

168. What is the simplified Boolean expression for the circuit of the previous problem?

a. $Y = \overline{A}$ c. $Y = \overline{A} + \overline{B}$

b. $Y = A \oplus B$ d. $Y = \overline{A}\ \overline{B}$

169. The simplified form of the Boolean expression $(X + \bar{Y} + Z)(X + \bar{Y} + \bar{Z})(X + Y + Z)$ is .....

a. $\bar{X}Y + \bar{Z}$ b. $X + \bar{Y}Z$ c. X d. $XY + \bar{Z}$

170. The Boolean expression for the circuit, shown in the figure aside, is .....

a. $A(B + C) + AB + (A + B)C$ c. $ABC + AB + ABC$

b. $A(B + C + B) + (A + B)C$ d. $A + B + C$

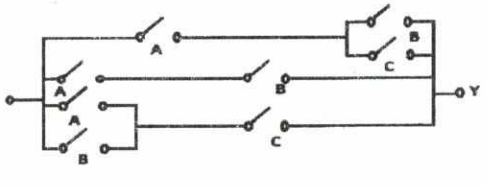

171. The minimum Boolean expression for the circuit, shown in the figure of the previous problem, is .....

a. $AB + AC + BC$ c. $A + B$

b. $A + BC$ d. $A + B + C$

172. The simplified expression for the Boolean function $A + A\bar{B} + A\bar{B}C$ is equal to .....

a. AB b. $A\overline{B}C$ c. A d. $A\overline{B}$

173. The minimum number of NAND gates required to implement the Boolean function of the previous problem is equal to .....

a.1 b. 2 c. 3 d. 4

174. The minimum number of NOR gates required to implement the Boolean function of the previous problem is equal to .....

a.1 b. 2 c. 3 d. 4

175. Which of the following statements is true for (A+B)(A+C)?

a. AC+BC b. AB+C c. A+BC d. AC+B

176. Extremely low power dissipation and low cost per gate can be achieved in ..... ICs.

a. MOS b. CMOS c. TTL d. ECL

177. Match each of the respective items X, Y and Z on the left with an approximation item on the right:

X. Shift register can be used	1. for code conversion
Y. A multiplexer can be used	2. to generate memory chip select
Z. A decoder can be used	3. for parallel to serial conversion
	4. as many to one switch
	5. for analogue to digital conversion

a. 1, 2, 3 b. 3, 4, 1 c. 5, 4, 2 d. 1, 3, 5

178. The figure, shown below to the left, represents a schematic diagram for a simple electronic combination lock. The LED on the right will be ON if and only if the keys pressed in keypad 1 are the same as the ones pressed in keypad 2. The suitable logic to perform the required logic is ..... gate.

a. XOR b. XNOR c. AND d. OR

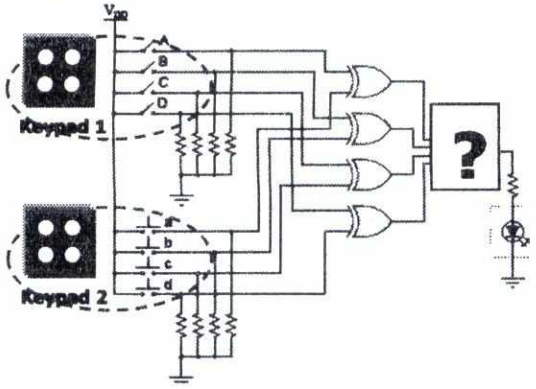

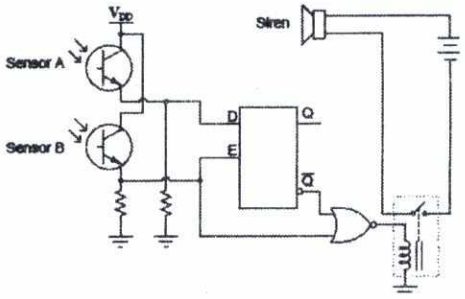

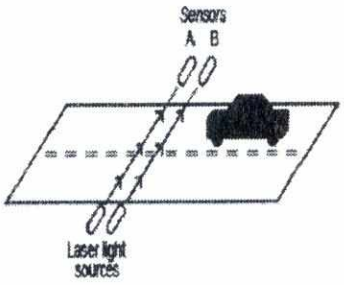

179. The figure shown above to the right represents a one way street. Both optical sensors A and B (distant 50cm from each other) connect to inputs on a level clocked D-type latch (with zero initial condition) shown above in the middle figure. The output of the sensors is logic "0" if the car is directly blocking the sensor light rays. The siren should operate if and only if the car is passing in the wrong way of the street. Please note that the siren will operate if and only if the output of the NOR gate is logic one. The right way for this street is .....

a. From left to right
b. From right to left
c. The siren will not operate either way the car passes
d. The siren will operate either way the car passes

180. Choose the suitable arrangement which represents count 5 for the shown number system.

Count0	Count1	Count2	Count3	Count4	Count5
●●●	●●□	●●◇	●□●	●□□	???

a. □●● b. ●◊● c. ●●◊ d. ●□◊

181. The logic function $F = \prod M(0,1,2,3,5,7,10,14)$ may be represented as .....

a. $F = \sum m(4,6,8,9,11,12,13,15)$
b. $\overline{F} = \prod M(4,6,8,9,11,12,13,15)$
c. $\overline{F} = \sum m(4,6,8,9,11,12,13,15)$
d. (a) and (b)

182. Using blocks of 4-bit parallel full adders, an 8-bit parallel adder can be implemented using .....

a. Two 4-bit adders and connecting the sum outputs of one to the bit input of the other.

b. Two 4-bit adders with the carry output of one connected to the carry input of the other.

c. Four 4-bit adders with no interconnections.

d. Eight 4-bit adders with no connections.

183. In the 2-bit comparator, the expression of the output (A>B) is given as .....

a. $A_1\overline{B}_1 + A_0\overline{B}_0$ b. $A_1\overline{B}_1 + (A_1 \oplus B_1)A_0\overline{B}_0$ c. $\overline{A}_1B_1 + \overline{A}_0B_0$ d. $\overline{A}_1B_1 + (A_1 \oplus B_1)\overline{A}_0B_0$

184. For a 4-bit universal shift register having its first stage as the one shown in the figure below, its functional truth table is .....

a.

S_1	S_0	
	0	No Change
0	1	Complement
1	0	Reset
1	1	Parallel Load

b.

S_1	S_0	
0	0	Complement
0	1	No Change
1	0	Set
1	1	Parallel Load

c.

S_1	S_0	
0	0	No Change
0	1	Complement
1	0	Set
1	1	Parallel Load

d.

S_1	S_0	
0	0	Complement
0	1	No Change
1	0	Reset
1	1	Parallel Load

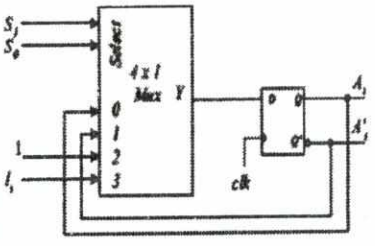

For the circuit shown in the following figure, button 3 of the numeric keypad (marked with the arrow at the left side of the figure) is pressed for 16 seconds; while switches S0 and S2 (at the input of the MUX) are closed during this whole period of time. The 555 timer (at the bottom left side of the figure) generates a square wave clock frequency of 1Hz, which makes it suitable for the human eye to watch the variations on the 7-segment display (at the right hand side of the figure). The 7-segment display is operated through a BCD to 7-segment decoder circuit taking its input from a 4 bit adder (with input signals A and B). Both counters (counter 1 and counter 2 at the bottom side of the figure) have the same clock frequency generated from the 555 timer. The $\overline{CLR}$ signal of counter 2 is deactivated and connected to logic HIGH.

For the case of button '3' which is depressed for 16sec, determine the resulting number showing on the 7-segment display during this period of time (from T1 to T16). In order to fill in the following table with the results, please answer from Q.185 to Q.200. Assume zero initial conditions for the circuit.

Time Signal (in sec)	T1	T2	T3	T4	T5	T6	T7	T8	T9	T10	T11	T12	T13	T14	T15	T16
Output on 7-Segment																

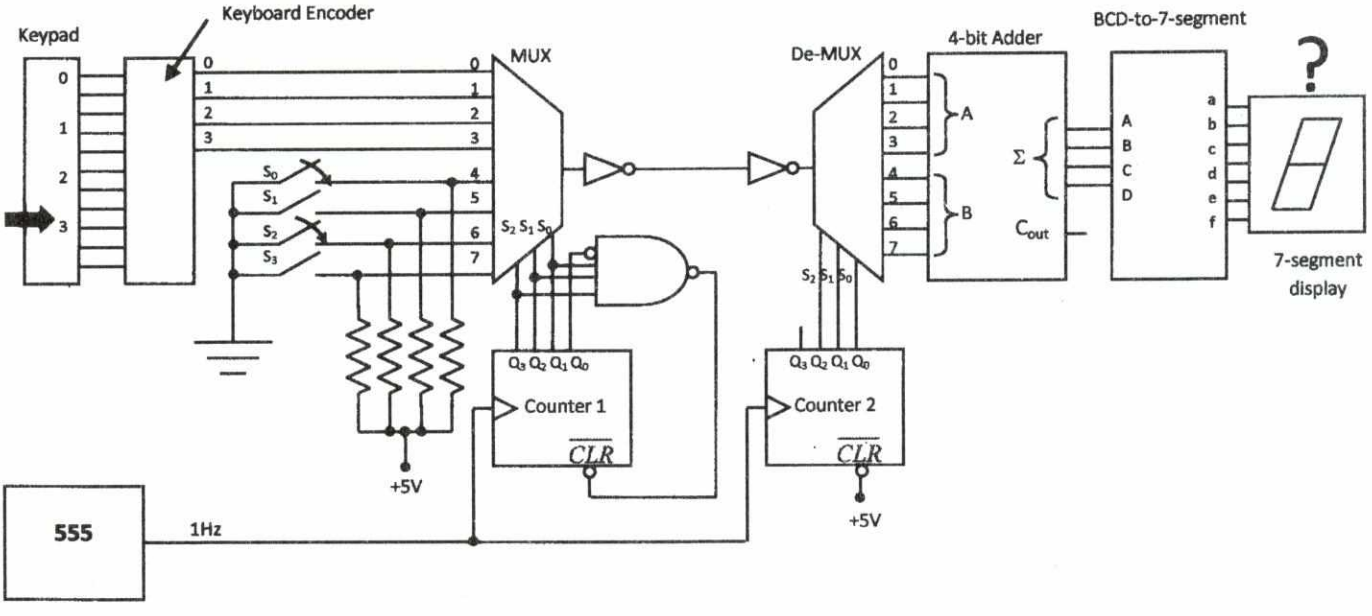

185. For the instant of time T_1, the output on the seven segment is .....

a. 0 b. 1 c. 2 d. 4

186. For the instant of time T_2, the output on the seven segment is .....

a. 0 b. 1 c. 2 d. 4

187. For the instant of time T_3, the output on the seven segment is .....

a. 0 b. 1 c. 2 d. 4

188. For the instant of time T_4, the output on the seven segment is .....

a. 0 b. 1 c. 2 d. 4

189. For the instant of time T_5, the output on the seven segment is .....

a. 1 b.2 c. 8 d. 4

190. For the instant of time T_6, the output on the seven segment is .....

a. 1 b.2 c. 8 d. 4

191. For the instant of time T_7, the output on the seven segment is .....

a. 1 b.2 c. 8 d. 4

192. For the instant of time T_8, the output on the seven segment is .....

a. 1 b.2 c. 8 d. 4

193. For the instant of time T_9, the output on the seven segment is .....

a. 2 b. 4 c. 5 d. 8

194. For the instant of time T_{10}, the output on the seven segment is .....

a. 2 b. 4 c. 5 d. 8

195. For the instant of time T_{11}, the output on the seven segment is .....

a. 2 b. 4 c. 5 d. 8

196. For the instant of time T_{12}, the output on the seven segment is .....

a. 2 b. 4 c. 5 d. 8

197. For the instant of time T_{13}, the output on the seven segment is .....

a. 0 b. 1 c. 2 d. 4

198. For the instant of time T_{14}, the output on the seven segment is .....

a. 0 b. 1 c. 2 d. 4

199. For the instant of time T_{15}, the output on the seven segment is .....

a. 0 b. 1 c. 2 d. 4

200. For the instant of time T_{16}, the output on the seven segment is .....

a. 0 b. 1 c. 2 d. 4

Best Wishes.

Alexandria University
Faculty of Engineering
Electrical Engineering Department

جامعة الإسكندرية
كلية الهندسة
قسم الهندسة الكهربية

First year
Electrical and Electronic Measurement

السنة الأولى كهرباء
القياسات الكهربية والإلكترونية

Important requirements

- write your answers with Ink pen.
- Draw neat diagrams.

Attempt in the following:

1) Draw the block diagram of a smart electronic measuring system (SMS).

2) Write three features that characterize the SMS.

3) Discuss the principle of operation of **ONE** thermoelectric transducer.

4) Enumerate two measurand quantities that use this transducer principle .

5) Estimate a simple circuit to detect measurand changes occur in this transducer.

6) Explain how to compensate for the ambient temperature effect.

7) Draw a schematic diagram for a measuring instrument that uses this transducer.

8) Draw the circuit diagram of a practical half-wave rectifier (**HWR**) **voltmeter.**

9) Explain how the diode:

a)Reverse bias problems are minimized, and

b) Forward bias linearity is improved .

10) Explain how the ac voltmeter sensitivity is affected.

A practical HWR voltmeter has: meter FSD current 50 uA, meter internal resistance of 4K, and linearity improvement resistance of one kilo ohm . Comupete:

11) the DC as well as the ac sensitivities.

12) the DC as well as the ac internal resistances for input voltage of 10 V .

13) Draw the circuit diagram of the error compensated Emitter Follower voltmeter (EFV).

14) Explain why this EFV can measure too small voltage values with high accuracy and stability

.

An error Compensated EFV has:
$V_{Cc} = - V_{EE} = 15V$, $R_1 = R_2 = R_3 = R_4 = 4k$
and $R_m = 1k$ and FSD of one volt.
15) Compute it's sensitivity and internal resistance.

16) Design a time base selector with time intervals from one nanosecond up to ten seconds.

17) Draw the basic block diagram of a digital frequency meter (DFM) .

18) Write the possible modes of DFM operation .

19) What are the basic ideas for modes changes .

20) Consider a DFM that has clock frequency of one GHz, Minimum frequency resolution of 100 Hz and largest time bas of 10 Hz . Compute:

- the number of decade divides for this DFM, and
-the minimum number of display digits.

Alexandria University
Faculty of Engineering
Electrical Engineering Department
Environmental Engineering

جامعة الإسكندرية
كلية الهندسة - قسم الهندسة الكهربية
قسم الهندسة الكهربية
مادة الهندسة البيئية

Examiner : Dr Eng Moustafa Osman	Final Exam in Environmental Engineering	1st Year /Electrical Eng
Time (120 min)	June, 2017	Total (50 points)

Question, 1 (5 points)

Indicate weather statement is True (√) or False (X)?

(1-1) Systems ecology is a fundamental approach to understand natural control of ecosystems.

(1-2) Addressing sustainability in a LCIA balanced systems' operation of available LCI.

(1-3) Basically, understand the midpoint-damage framework is engineering concern, **Why?**

(1-4) Satellites in exosphere are corresponding to atmospheric ecosystem as a biotic resource.

(1-5) Reference factor of Normalization Unit for global warming potential is CO2 equivalent.

Question, 2 (10 points– 5 points each part)

(2-1) Indicate three boundary layers of environmental systems? And assemble in detail drawing sketch these interconnection layers of a digital ecosystem (a computer hardware and software) using straight lines between electronic systems that include: Outputs and inputs modes, Processor(s), Control Feedback, Environment boundaries and interface?

(2-2) A plant is emitting 750 g/s of particulates. The stack height is 100 m and the plume rise is 50 m. The wind speed is 2 m/s and the stability category is C. (Consider the dispersion in longitudinal and lateral direction a= 0.1014 b =0.925 c= 0.197 d= 0.906)

$$\sigma_y = cx^d$$

$$\sigma_z = a\,x^b$$

a) What is the maximum estimated ground-level concentration after 10 minutes?
b) How far downwind it does occur when emission is reduced 50%?

Question, 3 (10 points – 5 points each part) answer only two

(3-1) What is the basic component of Inventory life cycle? Calculate the SO_2 emissions load from the combustion of oil based on fuel analysis results and the fuel flow information. fuel flow rate R = 46,000 lbs/hr and percent sulfur (% S) in fuel = 1.17? (S=32) (O=16)

(3.2) A wave of frequency 1500 Hz travels in air of density 1.225 $kg.m^{-3}$ at 340 $m.s^{-1}$. If the wave has intensity 30 $\mu W.m^{-2}$, Find the displacement and pressure amplitudes?

(3.3) Methane is burned with excess air in a steady-flow combustion chamber. The product temperature, entropy generated, reversible work, and energy destroyed are to be determined for air combustion gases are ideal, steady operation conditions and kinetic and potential energies are negligible.

Question, 4 (10 points – 5 points each part) answer only two

(4-1) Estimate the plume rise for a 5 m diameter stack whose exit gas has a velocity of 20 m/s when the wind velocity is 3 m/s, the pressure is 1 atm, and the stack and surrounding temperatures are 100 ° C and 15 ° C, respectively

(4-2) Reflected that partially 20.2 gigatons per year of carbon dioxide are emitted to the atmosphere by fossil fuel combustion, and 1.6 gigatons of carbon per year are emitted due to misuse activities such as constructions in cultivated lands. Considering the mass of the atmosphere is 5.148×10^{18} kg (or 5.148×10^{6} gigatons) air. Assume the average global increase in atmospheric carbon dioxide concentration is 2.1 ppm per year and all carbon in the atmosphere is contained in carbon dioxide. The carbon is not accumulated in the atmosphere, 0.5 gigatons absorbed by trees for photosynthesis, and 34 wt% of this carbon is either consumed by non-tree vegetation or accumulated in the soil, and the rest of the carbon is deposited into oceans, lakes, and rivers.

a) Drive in detail sketch the mass balance flow diagram of carbon cycle from the atmosphere into oceans, lakes, and rivers?
b) Determine approximate flow rate levels of the accumulated global carbon dioxide?

(4-3) What is the major source of fuel combustion NOx impact? Complete the diagram to explore what the major techniques for NOx control?

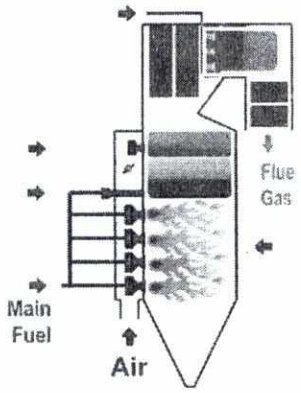

Question, 5 (15 points – 5 points each part)

(5-1) Calculate the stoichiometric (kg) amount of air required for the complete combustion of (1 kg) of liquid fuel with the following properties:

Constituents	% By weight
Carbon (C)	85.9
Hydrogen (H)	12
Oxygen (O2)	0.7
Nitrogen (N)	0.5
Sulphur (S)	0.5
Moisture (H2O)	0.35
Ash	0.05
Total	**100**

The gross calorific value (GCV) of the liquid fuel is 10200 kCal/kg.

Alexandria University Faculty of Engineering Electrical Engineering Department June 2017		جامعة الاسكندرية كلية الهندسة قسم الهندسة الكهربية يونيو ٢٠١٧
Mathematics 4 First year Time allowed: Three Hours		رياضيات ٤ السنة الاولى الزمن: ثلاث ساعات

Answer the following questions

ابدأ اجابة كل سؤال فى صفحه جديدة على ان تكون اجزاء السؤال متعاقبة وبالترتيب

Question (1)

a) Given the vectors $\boldsymbol{D} = \dfrac{\boldsymbol{a}\times\boldsymbol{b}}{\boldsymbol{a}.\boldsymbol{b}\times\boldsymbol{c}}$, $\boldsymbol{E} = \dfrac{\boldsymbol{b}\times\boldsymbol{c}}{\boldsymbol{a}.\boldsymbol{b}\times\boldsymbol{c}}$ and $\boldsymbol{F} = \dfrac{\boldsymbol{c}\times\boldsymbol{a}}{\boldsymbol{a}.\boldsymbol{b}\times\boldsymbol{c}}$

Show that if $\boldsymbol{a}.\boldsymbol{b}\times\boldsymbol{c} = Q \neq 0$ then $\boldsymbol{D}.\boldsymbol{E}\times F = 1/Q$.

b) Let S be a closed surface and D be a region bounded by S. Show that $\iiint_D div\ \boldsymbol{n}\, dV = A$ where $\boldsymbol{n}$ is the unit outer normal to S and A is the area of S.

c) Determine if the following vector field $\boldsymbol{F}(x,y,z) = (1+2xy^2+e^y)\boldsymbol{i} + (2x^2y + xe^y)\boldsymbol{j} + 3z^2\boldsymbol{k}$ is **conservative** and find its scalar potential which has the value 7 at the origin.

Question (2)

a) Verify Green's Theorem for the integral $\oint_C (x^2 - y^2)dx + (2xy+3)dy$ where C is the boundary of the region defined by $y^2 = 2x$ and $x = 8$.

b) Verify **Stokes' theorem** for the vector field $\boldsymbol{F} = xz\,\boldsymbol{i} + y\,\boldsymbol{j} + y^2x\,\boldsymbol{k}$; where S is the bouunded by $y = 0$, $z = 0$ and $4x + y + 2z = 4$ above the yz −plane. $0 \le x \le 2$

Question (3)

a) Verify the **divergence theorem of Gauss** for the field given by $\boldsymbol{F}(x,y,z) = 3x^2y\,\boldsymbol{i} + xy^2\,\boldsymbol{j}$ over the closed surface of a triangular prism of unit height in the z-direction whose base is bounded by the positive x and y-axes and the line $x + y = 1$

b) Show that the curvilinear system $x = 2u_1u_2$, $y = u_2^2 - u_1^2$, $z = u_3$ is an **orthogonal system** hence compute the unit vectors $\boldsymbol{e}_i$ and the scale factor h_i . Evaluate *div* $\boldsymbol{F}$ where $\boldsymbol{F} = u_2\boldsymbol{e}_1 + u_3\boldsymbol{e}_2 + u_1\boldsymbol{e}_3$.

Question (4)

a) Let $f(t) = 2te^{-2t}\sin^2 t$, evaluate the following :

i) $L\{f(t)\}$ **ii)** $L\{f'(t)\}$ **iii)** $L\left\{\int_0^t f(x)\,e^{2t-x}\,dx\right\}$ **iv)** $\int_0^\infty \frac{f(t)}{t}\,dt$

b) Find the Laplace transform of the periodic function f(t) which is defined in it's period $[0,2]$ by

$$f(t) = \begin{cases} t^2, & 0 < t < 1 \\ \cos \pi t, & 1 < t < 2 \end{cases}$$

c) Find $L^{-1}\left\{\frac{1}{(s - e^{-s})}\right\}$

Question (5)

a) Prove that $L\{\delta(t-a)\} = e^{-as}$

b) The mathematical model representing an R-C series circuit is $Rq' + \frac{1}{C}q = v(t),\ q(0) = 0$.

If $R = 50$ ohms, $Q = 0.01$ coloumbs and $v(t) = 50\,\delta(t-1)$ volts, find q(t) and hence calculate the time at which the charge on the capacitor is equal to $\frac{1}{e}$ coloumbs.

c) If $F(s) = \frac{1}{s(s^2+3s+2)}$, find $f(t)$ and hence verify the Initial and Final-Value Theorems.

Question (6)

a) Find the Fourier series of $f(x)$ whose definition in one period is given by

$$f(x) = \begin{cases} 2, & -2 < x < -1 \\ x + 1, & -1 < x < 1 \\ 0, & 1 < x < 2 \end{cases}$$

b) The definition of the function f(x) in $[0,2]$ is given by

$$f(x) = \begin{cases} 1 + x^2, & 0 < x < 1 \\ 2 - x, & 1 < x < 2 \end{cases}$$

It is required to expand the function in Fourier series in the following **two cases**:

i) $f(-x) = -f(x)$ ii) $f(x) = -f(x+2)$

Write only the form of the expansion and ***sketch the graph of the function in a full period***.

c) Find the interval of convergence of the power series

i) $\sum_{n=1}^{\infty} \frac{(-1)^n n(x+2)^n}{n^2+1}$, ii) $\sum_{n=1}^{\infty} \frac{\sin(nx)}{\sqrt{n^3+1}}$

GOOD LUCK

Dr. Nagwa Badran & Dr. Ahmed Hisham

جامعة الاسكندرية — المادة :أساسيات المحاسبة والتكاليف

كلية الهندسة — دور مايو ٢٠١٧

قسم الهندسة الكهربية — الزمن : ١٢٠ دقيقة

السؤال الاول

فيما يلى بعض الارصدة المستخرجة من دفاتر شركة الرحاب الصناعية عن العام المنتهى فى ٢٠١٦/١٢/٣١ :

مخزون مواد مباشرة اول الفترة	٥٠٠٠٠	، مخزون مواد مباشرة اخر الفترة	٣٥٠٠٠
مشتريات مواد مباشرة	١٨٠٠٠٠	، تكلفة النقل للداخل	١٥٠٠٠
مردودات مشتريات مواد مباشرة	٢٥٠٠٠	، خصم نقدى مكتسب	٥٠٠٠
اجور عمال الانتاج	١٢٠٠٠٠	، تكاليف صناعية غير مباشرة	٢١٠٠٠٠

التغير فى مخزون الانتاج تحت التشغيل بالزيادة ٢٠٠٠٠

التغير فى مخزون الانتاج التام بالنقص ١٠٠٠٠

المطلوب :

١- تحديد تكلفة الانتاج التام خلال الفترة .

٢- تحديد تكلفة البضاعة المباعة خلال الفترة .

٣- تحديد تكلفة التحويل .

السؤال الثانى

اولا :تنتج شركة النصر الصناعية حاليا ٧٥٠٠٠ وحدة تمثل ٧٥% من الطاقة القصوى ويبلغ سعر البيع للوحدة ٥٠ جنيه ومتوسط التكلفة الكلية للوحدة ٤٠ جنيه منها ٢٠% تكاليف صناعية ثابتة وقد تلقت الشركة عرضين من احد الوكلاء كما يلى :

العرض الاول : بيع ٣٠٠٠٠ وحدة بسعر بيع ٣٨ جنيه .

العرض الثانى :بيع ٢٠٠٠٠ وحدة بسعر بيع ٣٥ جنيه .

المطلوب :

هل تقبل الشركة العرض الاول ام الثانى ولماذا ؟

١٢

ثانيا :تفكر شركة الايمان فى شراء احد الاجزاء بدلا من تصنيعة داخل الشركة وتبلغ تكلفة التصنيع(٨ مواد مباشرة،٤ اجور مباشرة،٤ تكاليف صناعية متغيرة ،٤ تكاليف صناعية ثابتة) وقد عرض احد الموردين توريد هذا الجزء بسعر ١٥ جنيه وفى هذة الحالة تتحمل الشركة ٢٠٠٠٠ جنيه عموله شراء . فاذا علمت ان الاحتياجات السنوية من هذا الجزء ١٠٠٠٠ وحدة .

المطلوب :

هل تنصح الشركة بالتصنيع الداخلى ام بالشراء من الخارج؟وما هو حجم السواء.

السؤال الثالث

اولا :اذا بلغت التكاليف الصناعية الثابتة ١٣٠٠٠٠جنيه والتكاليف البيعية الثابتة ٦٠٠٠٠جنيه والتكاليف الادارية الثابتة ٥٠٠٠٠ جنيه وبفرض ان سعر بيع الوحدة ٦٠جنيه ومتوسط التكلفة المتغيرة للوحدة يشمل ٩ خامات، ١٢ اجور مباشرة ، ٩ تكاليف صناعية غير مباشرة، وعمولة مبيعات ١٠% من سعر البيع.

المطلوب :

١- تحديد حجم وقيمة التعادل .

٢- تحديد حجم المبيعات الذى يحقق ربح مستهدف ١٢٠٠٠٠ جنيه .

٣- اذا كان حجم المبيعات المتوقع ١٢٥٠٠ وحدة فما هى نسبة هامش الامان ؟

ثانيا : فيما يلى بعض الارصدة الخاصة بشركة النجاح التجارية فى ٢٠١٦/١٢/٣١ :

الاصول المتداولة	٢٠٠٠٠٠	،	الاصول الثابتة	٣٠٠٠٠٠
الاصول غير الملموسة	٢٥٠٠٠٠	،	الالتزامات قصيرة الاجل	١٥٠٠٠٠
الالتزامات طويلة الاجل	٤٠٠٠٠٠			

المطلوب :

اعداد قائمة المركز المالى وتحديد قيمة حقوق الملكية .

مع اطيب الامنيات بالنجاح والتفوق،،،